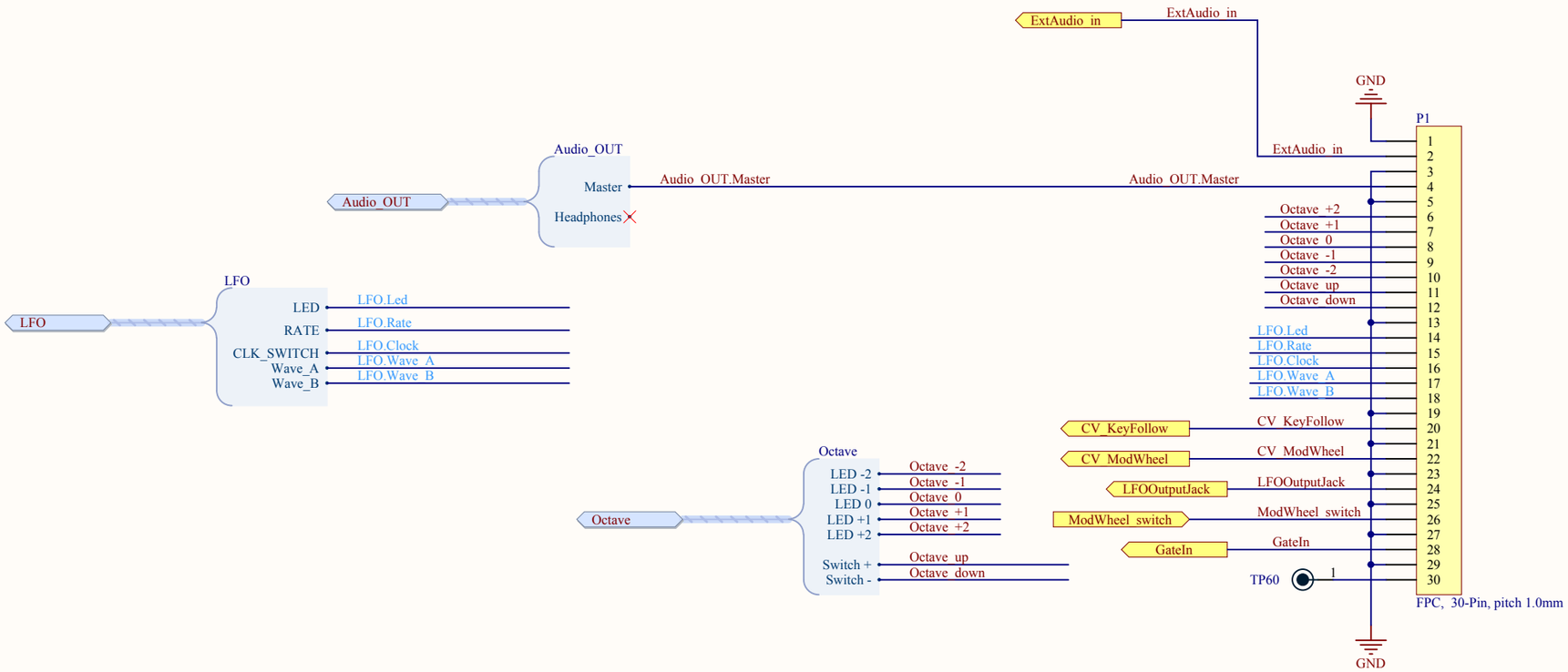

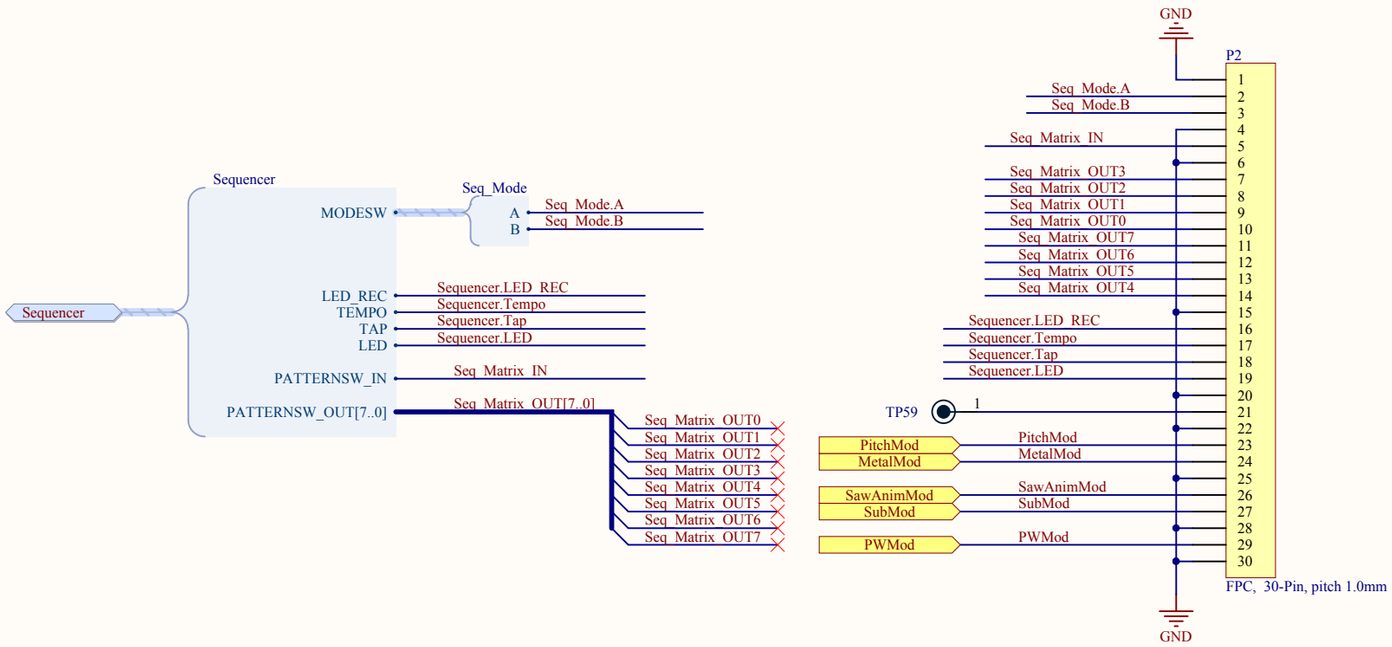

Details of this schematic are subject to change without notice.
Any modification to any MiniBrute will immediately void its warranty.
Arturia or any of its affiliates will not accept responsibility for any
damages, personal loss or injury that may result from any modification

Title	*LiaisonsAnalogArm.SchDoc*		
Size: A3	Number: 7	Revision: B	
Date: 03/09/2015	Time: 16:37:16	Sheet 7 of 13	
File: G:\MicroBrute_publicRelease\LiaisonsAnalogArm.SchDoc			

Arturia
30, chemin du vieux chene
38240 Meylan
FRANCE

ARTURIA