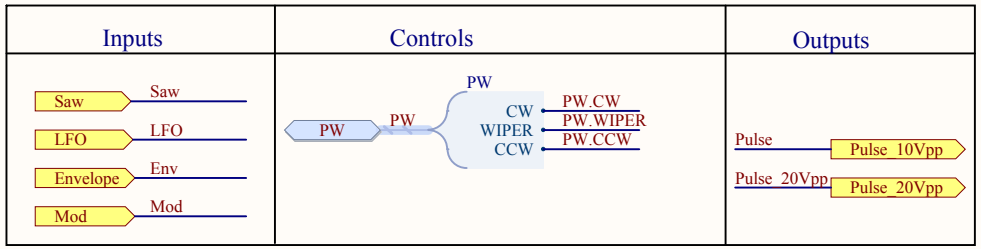

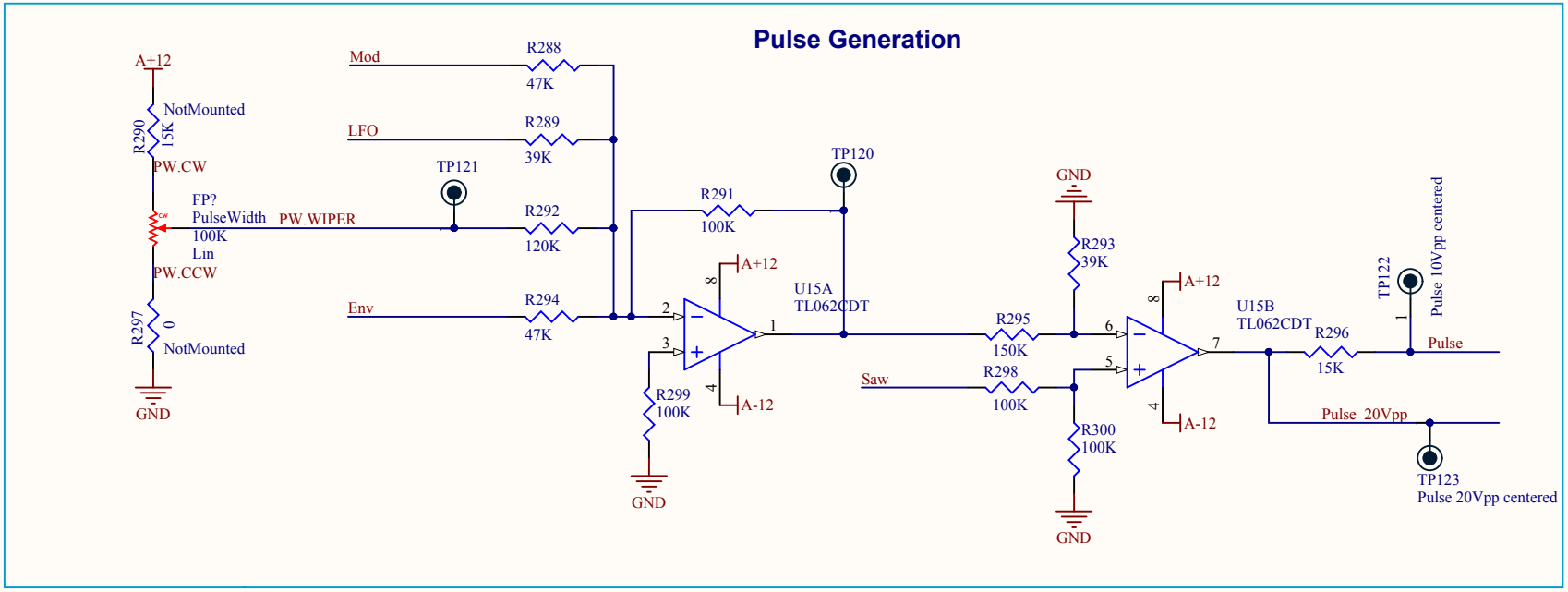

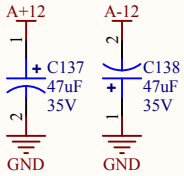

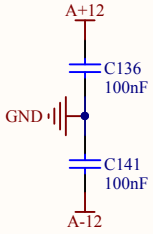

Details of this schematic are subject to change without notice.
Any modification to any MiniBrute will immediately void its warranty.
Arturia or any of its affiliates will not accept responsibility for any
damages, personal loss or injury that may result from any modification

Title *SawToPW.SchDoc*			*Arturia* *30, chemin du vieux chene* *38240 Meylan* *FRANCE*
Size: A4	Number: 14	Revision: B	
Date: 03/09/2015	Time: 16:34:53	Sheet 14 of 24	
File: G:\MicroBrute_publicRelease\Modules\Analog\SawToPW.SchDoc			

ARTURIA