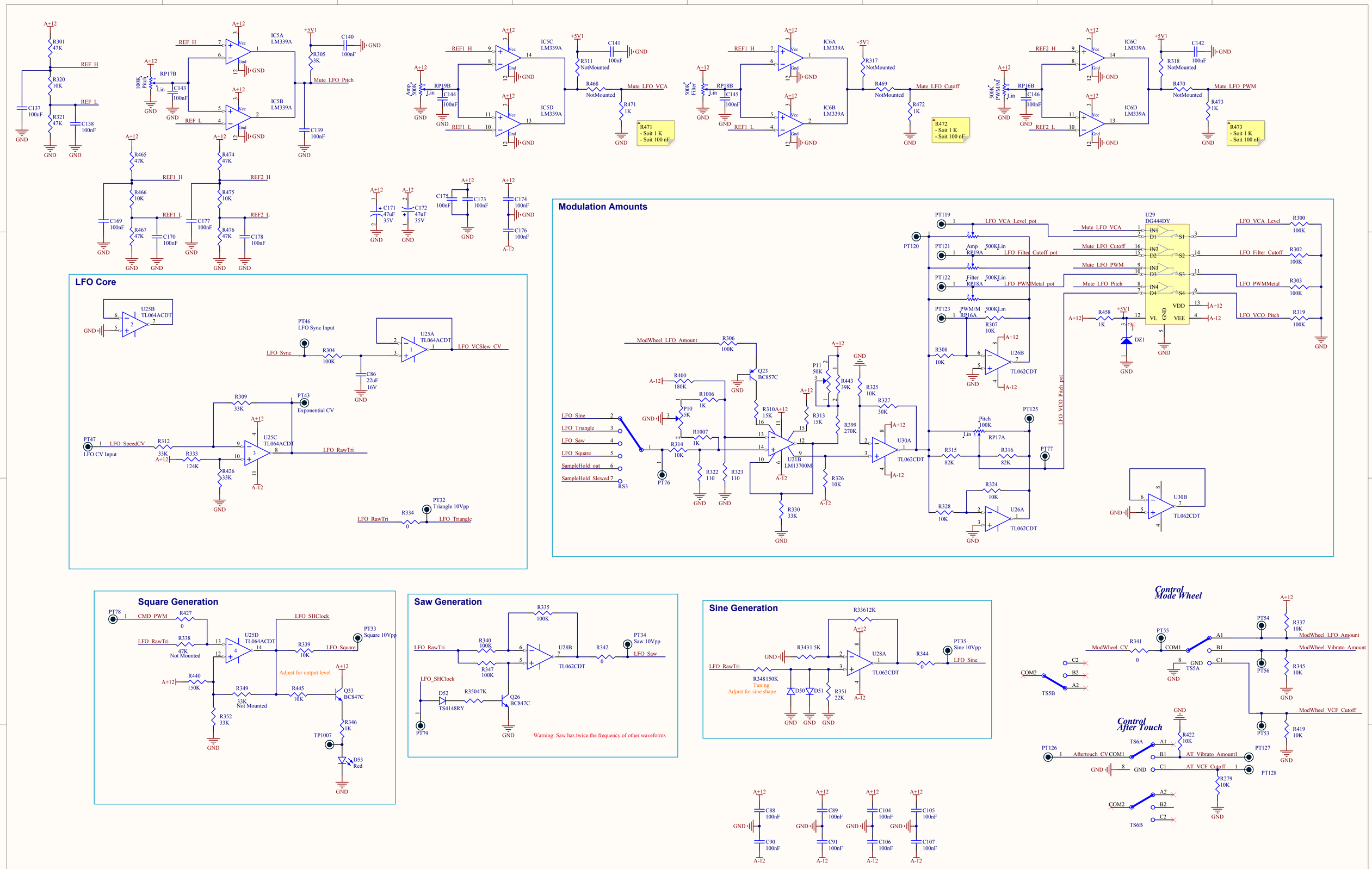
LFO Core
Modulation Amounts
Square Generation
Saw Generation
Sine Generation
Control Mode Wheel
Control After Touch
Warning: Saw has twice the frequency of other waveforms
Adjust for output level
Tuning
Adjust for sine shape
Design :
ARTURIA & Yves USSON
Details of this schematic are subject to change without notice. Any modification to any MiniBrute will immediately void its warranty. Arturia or any of its affiliates will not accept responsibility for any damages, personal loss or injury that may result from any modification to the device.
PAGE 12/ 15
LFO.SchDoc
Project : miniBrute
Revision : F
Schematics
13001 - AnalogBoard
Public Release