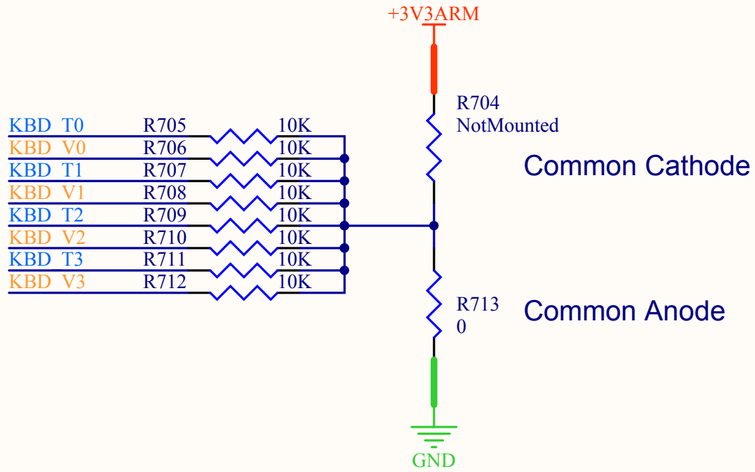

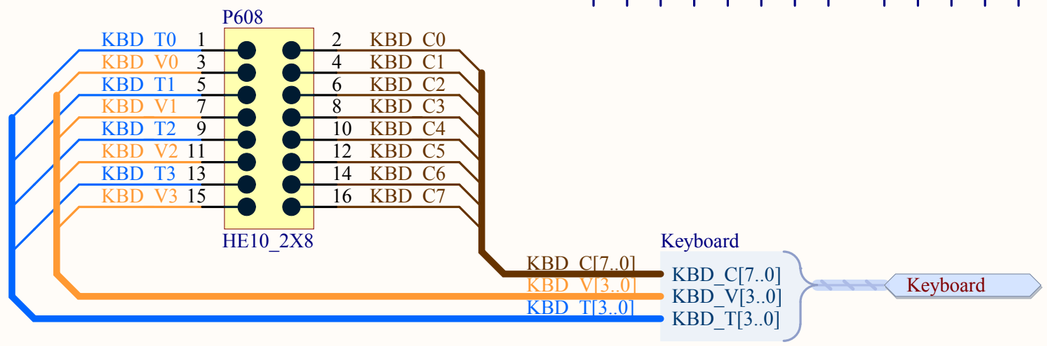

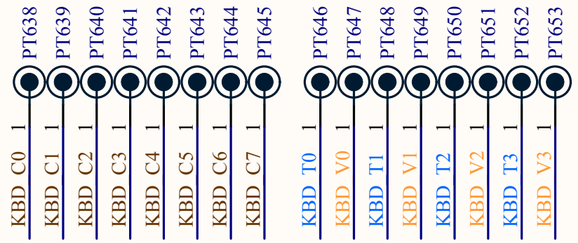

Design :	ARTURIA & Yves USSON	Details of this schematic are subject to change without notice. Any modification to any MiniBrute will immediately void its warranty. Arturia or any of its affiliates will not accept responsibility for any damages, personal loss or injury that may result from any modification to the device.	PAGE 14/ 14
Keyboard.SchDoc		Project : miniBrute	Revision : C
Schematics		13001 - AnalogBoard	Public Release